3/8" SQ.DR. MINI IMPACT WRENCH

EXPLODED VIEW

SP-7825

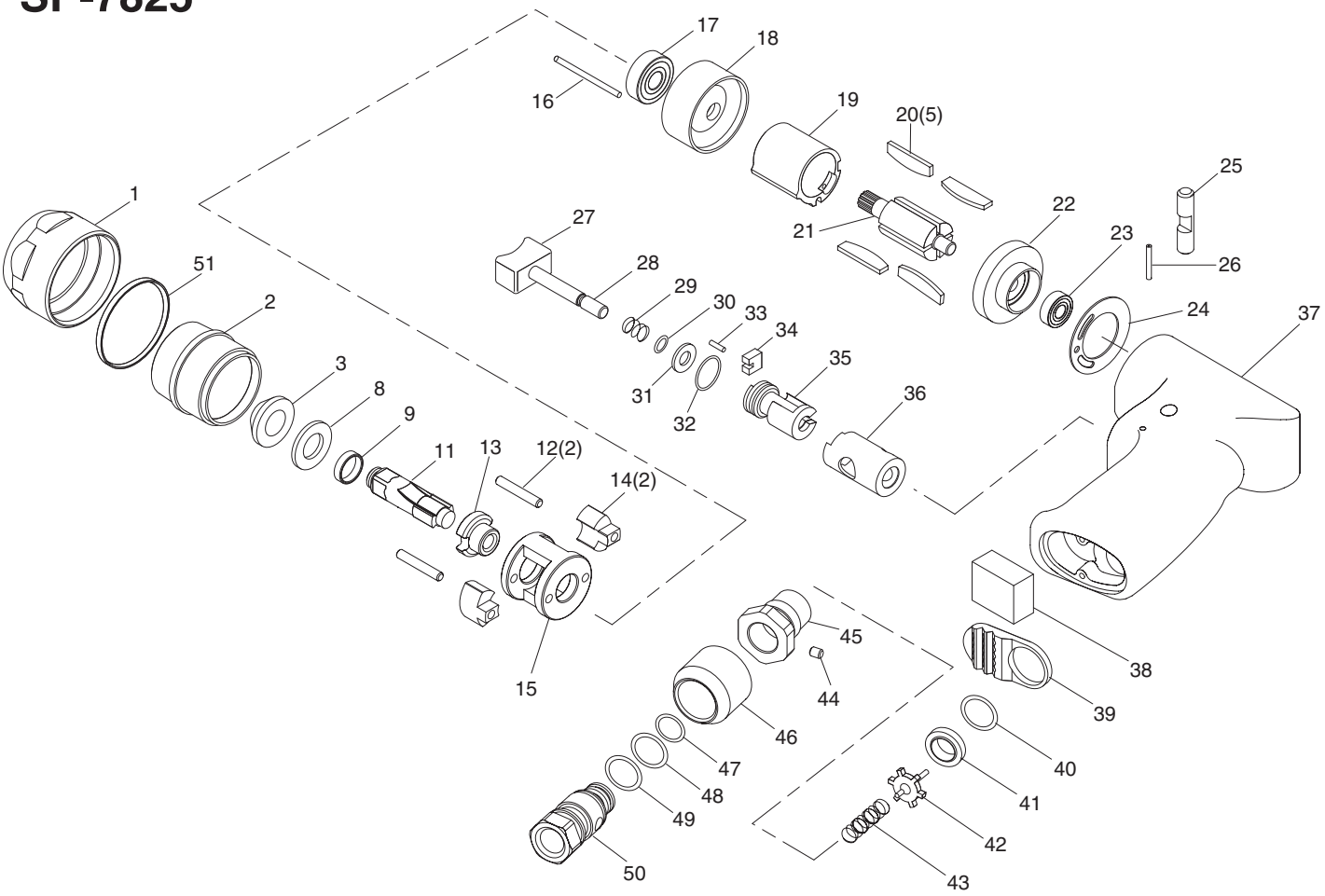

PARTS LIST

Index No.	Parts No.	Description	Qty. Per tool
1	7825-01	Rock Ring	1
2	7825-02	Clutch Housing	1
3	7825-03	Bushing	1
8	7825-08	Spacer	1
9	7825-09	Collar	1
11	7825-11	3/8" Anvil Shank	1
12	7825-12	Hammer Cage Pin	2
13	7825-13	Cam	1
14	7825-14	Hammer	2
15	7825-15	Hammer Cage	1
16	7825-16	Motor Pin	1
17	7825-17	Ball Bearing	1
18	7825-18	Front End Plate	1
19	7825-19	Cylinder	1
20	7825-20	Rotor Blade	5
21	7825-21	Rotor	1
22	7825-22	Rear End Plate	1
23	7825-23	Ball Bearing	1
24	7825-24	Motor Gasket	1
25	7825-25	Reverse Button	1
26	7825-26	Roll Pin	1
27	7825-27	Trigger	1
28	7825-28	Valve Shaft	1
29	7825-29	Spring	1
30	7825-30	O-Ring	1
31	7825-31	Washer	1
32	7825-32	O-Ring	1
33	7825-33	Needle Roller	1
34	7825-34	Slide Plate	1

Index No.	Parts No.	Description	Qty. Per tool
35	7825-35	Reverse Valve	1
36	7825-36	Reverse Bush	1
37	7825-37	Motor Housing	1
38	7825-38	Muffler Foam	1
39	7825-39	Deflector	1
40	7825-40	O-Ring	1
41	7825-41	Valve Seat	1
42	7825-42	Valve	1
43	7825-43	Valve Spring	1
44	7825-44	Screw	1
45	7825-45	Regulator Bush	1
46	7825-46	Regulator	1
47	7825-47	O-Ring	1
48	7825-48	O-Ring	1
49	7825-49	O-Ring	1
50	7825-50	Inlet Bushing	1
51	7825-51	Ring	1

The types and specifications may be changed without notice.